DWG NO.

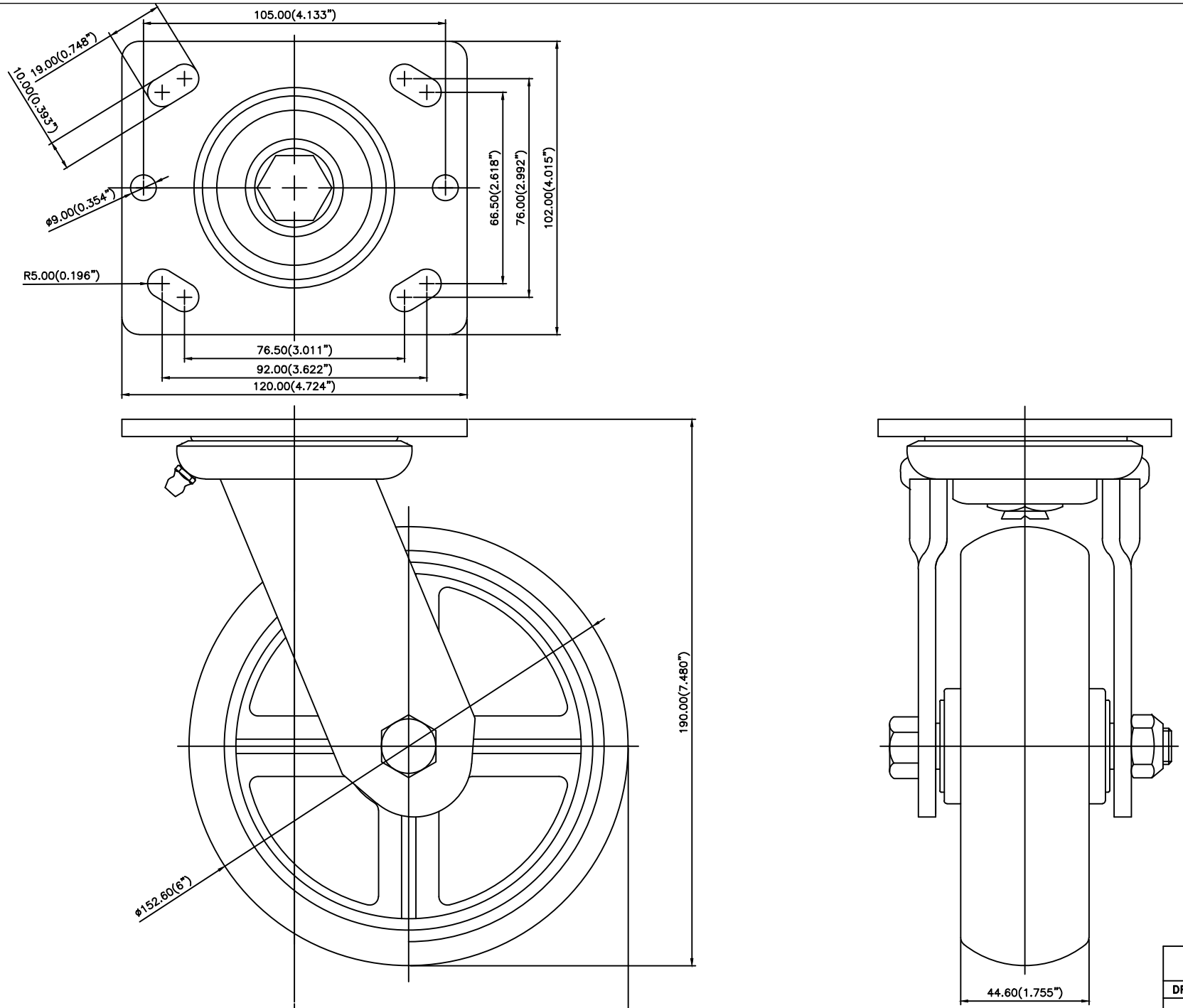

NAME	TP6661-01-PCIC ASS'Y			
DRAWN	DESIGN	CHECKED	APPROVED	

CODE	MEMO	DATE	SIGN

THIRD ANGLE DRAW	SCALE	1 / 1	DWG NO.
	DATE	2018.10.15	

SAMSONG CASTER. CO., LTD.
TRIOPINES CASTERS. CO., LTD.

REF. NO.